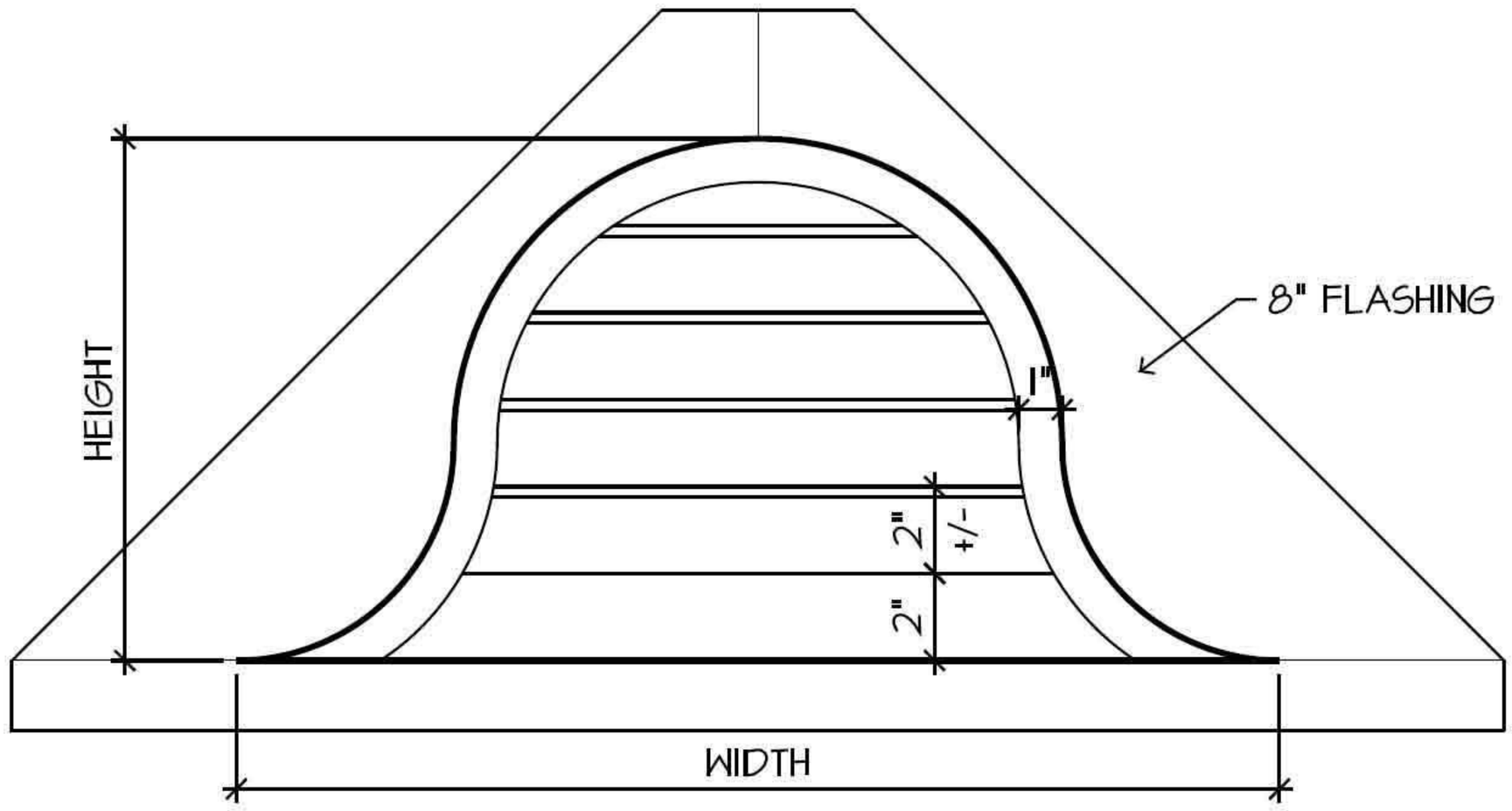

FRONT VIEW

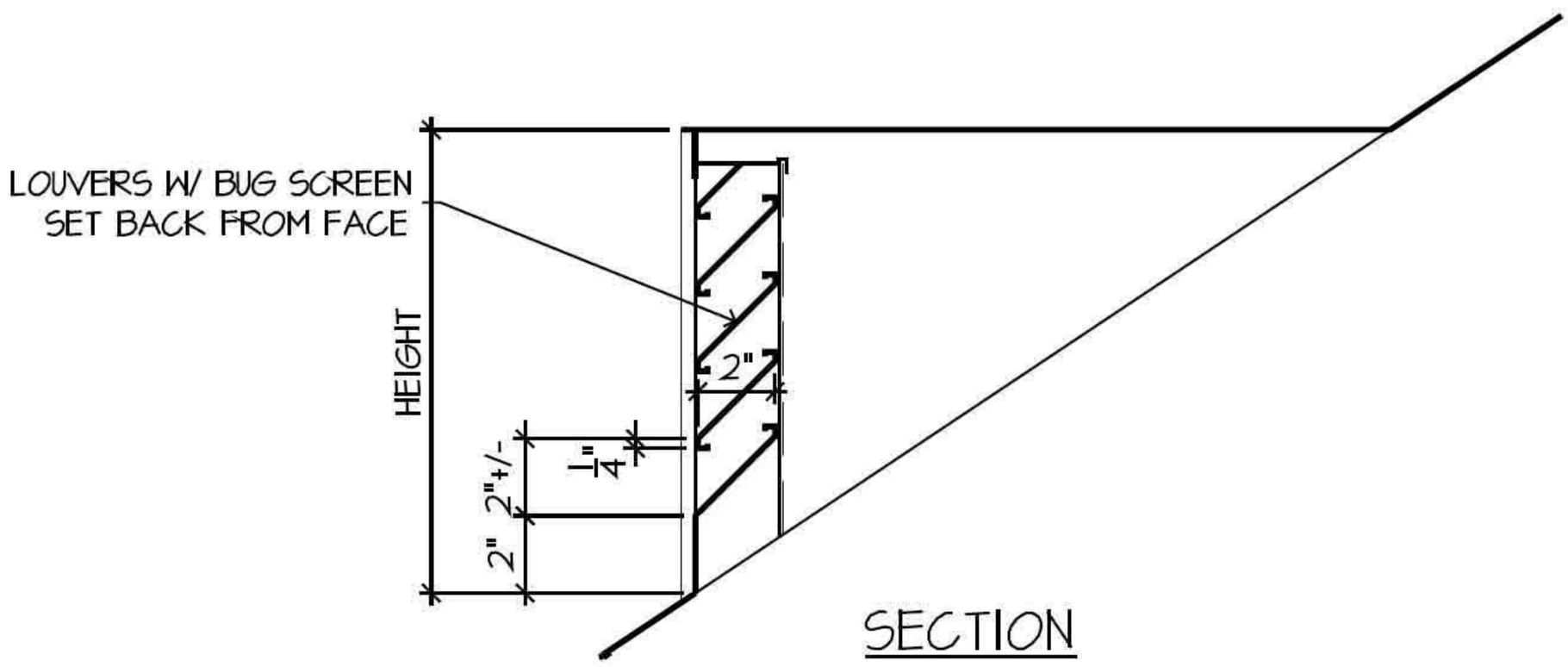

SECTION

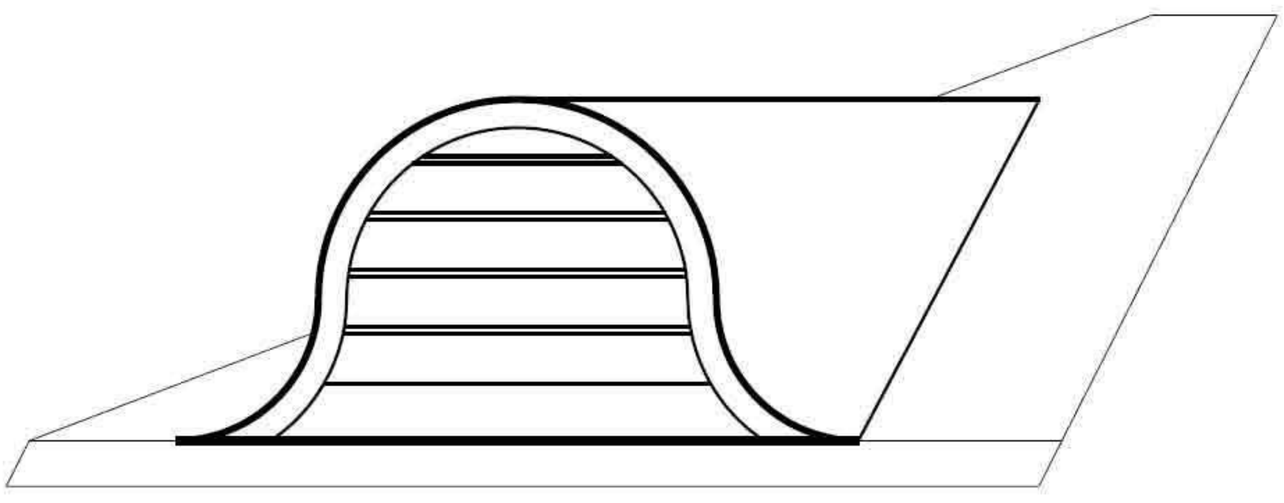

Part No:	Width	Height	Net Free Area
EDV-2-24	24"	12"	43.5 sq in
EDV-2-30	30"	15"	109 sq in
EDV-2-36	36"	18"	137 sq in
Custom			

OLD WORLD DISTRIBUTORS, INC.

Part No.: Elliptical Vent

Available Materials:
16 oz Copper (.021 thickness)
16 oz Freedom Gray Copper
24 ga Kynar Painted Steel
7 mm Shiny Zinc

Notes:
Ridge length varies with roof pitch.