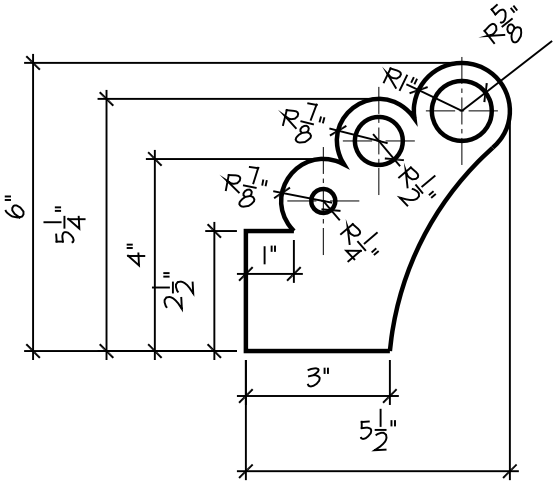

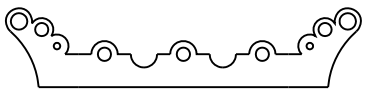

Used with
R6S Eyelet Cresting

OLD WORLD DISTRIBUTORS, INC.®

Part No.: RT6S Eyelet Terminator

Available Materials:
48 oz Copper (.063 thickness)
18 ga Stainless Steel

Notes:
- Flat Profile.
- Used with RM2 Medium Ridge.